ERS tech

Website: www.erstech.com.au

LED Sensor Shop light

INSTRUCTION MANUAL

110 lm/W





Shenzhen ERS Technology

Factory Add: C209, Baohuasen International Center, Qianjin Second Road, Xixiang Town, Bao'an District, Shenzhen, China

Warehouse Add: 57 Tarnard Dr, Braeside VIC 319

Tel: 048 470 3010

Email: info@erstech.com.au

SAA APPROVALS

Victorian Energy Upgrades

3 year warranty

IPART Independent Pricing and Regulatory Tribunal New South Wales

LM_80 TM 21 LM 79 ISTMT LCP

ESSENTIAL SERVICES COMMISSION

ERS tech
Website: www.erstech.com.au

Accessories

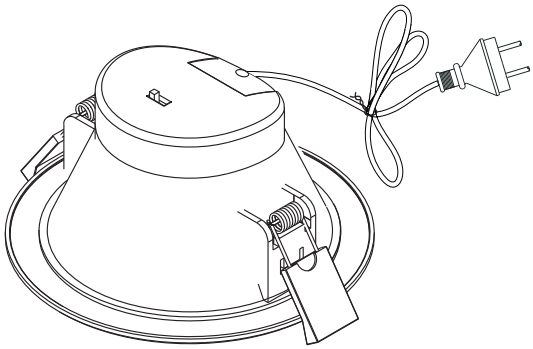

×1

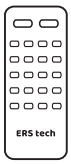

×1

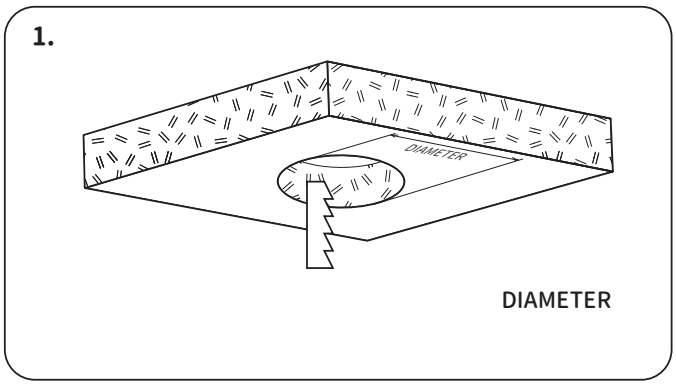

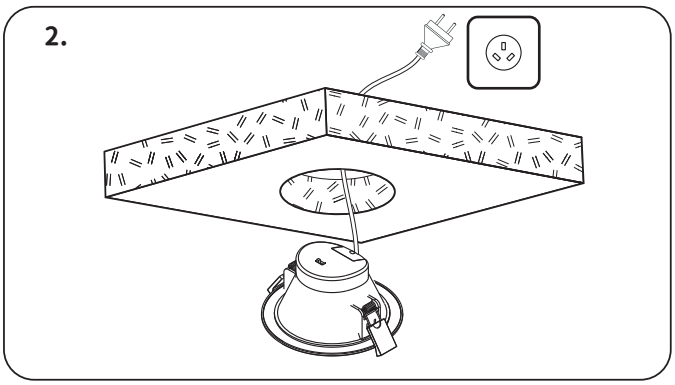

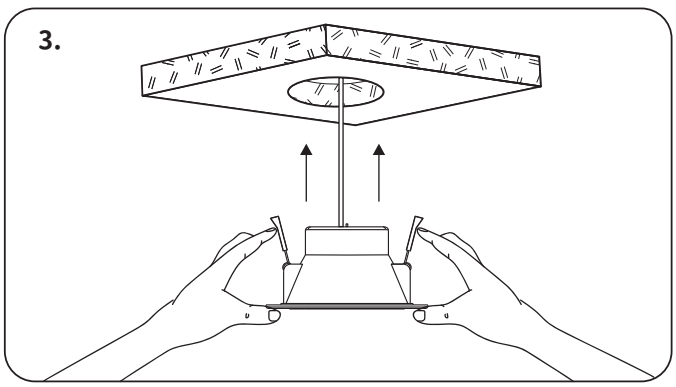

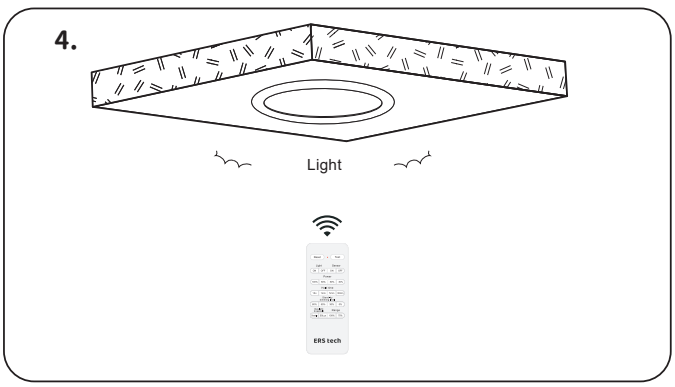

LED Sensor Shop light Installation Guide:

NOTE: Before installation, plug the LED downlight into a socket outlet to ensure the LED down-light is working correctly.

1. Open an installation hole on the ceiling that is suitable for the product size（DIAMETER）.
2. Connect the luminaire plug to the socket outlet;
3. Push the springs up and put the LED downlight module up through the cut-out hole and into the ceiling.
4. After the installation, switch on the LED downlight to test all the lighting functions and enjoy your new lighting product.

Shenzhen ERS Technology
Factory Add: C209, Baohuasen International Center, Qianjin Second Road, Xixiang Town, Bao'an District, Shenzhen, China
Warehouse Add: 57 Tarnard Dr, Braeside VIC 319

Tel: 048 470 3010
Email: info@erstech.com.au

SAA APPROVALS
Victorian Energy Upgrades
3 year warranty
IPART Independent Pricing and Regulatory Tribunal New South Wales
LM_80 TM 21 LM 79
ISTMT LCP
ESSENTIAL SERVICES COMMISSION

ERS tech
Website: www.erstech.com.au

SPECIFICATIONS

Item No.	ERS–DL4/8WS–A	ERS–DL6WS–A	ERS–DL6/10WS–B	ERS–DL8WS–B	ERS–DL8/10/12WS–C
∅Cutout (mm)	90	90–100	110	110–130	140
Item No.	ERS–DL10/14WS–D	ERS–DL12WS–D	ERS–DL12/14WS–E	ERS–DL16WS–E	
∅Cutout (mm)	150	155–175	200	180–210	

Shenzhen ERS Technology
Factory Add: C209, Baohuasen International Center, Qianjin Second Road, Xixiang Town, Bao'an District, Shenzhen, China
Warehouse Add: 57 Tarnard Dr, Braeside VIC 319

Tel: 048 470 3010
Email: info@erstech.com.au

SAA APPROVALS
Victorian Energy Upgrades
3 year warranty
IPART Independent Pricing and Regulatory Tribunal New South Wales
LM_80 TM 21 LM 79
ISTMT LCP
ESSENTIAL SERVICES COMMISSION