energetic®
Smarter lighting

AU-M117 V1.2

Unit LED Bunker Installation Guide

WARNING:
-PLEASE READ THE INSTRUCTIONS BEFORE INSTALLATION.
-THE LIGHT SOURCE COUTAINED IN THIS LUMIUAIRE SHOULD ONLY BE REPLACED BY THE MANUFACTUBER OR HIS SERVICE AGENT OR A SIMILAR QUALIFIED PERSON.
-WARRANTY VOID IF NOT INSTALLED BY QUALIFIED ELECTRICIAN. FULL WARRANTY TERMS AVAILABLE ON OUR WEBSITE.
-THE POWER SUPPLY MUST BE TURNED OFF BEFORE INSTALLATION.
-AC INPUT WIRE SPECIFICATIONS: 1.5MM²-4MM²



Product Specification

Order Code	Model	Size(mm)	Wattage(w)	Voltage(v)	Frequency(Hz)	Ambient temperature range	PF	Weight(kg)
281003	BHD1-TC-D3022MN 22W	Ø300×H85	22/15/10	220-240	50	-30℃~50℃	0.9	0.82
281004	BHD1-TC-D3022MN 22W	Ø300×H85	22/15/10	220-240	50	-30℃~50℃	0.9	0.82

Installation of Unit LED Bunker basic model

1

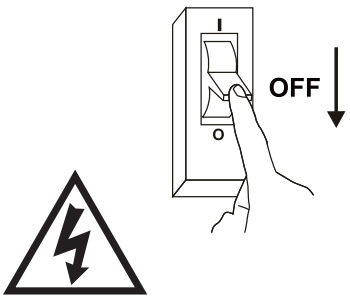

1. Disconnect mains supply before installation.

2

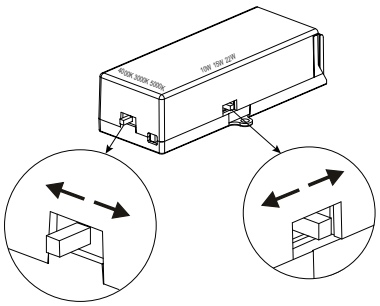

2. Select preferred colour temperature and wattage setting.

3

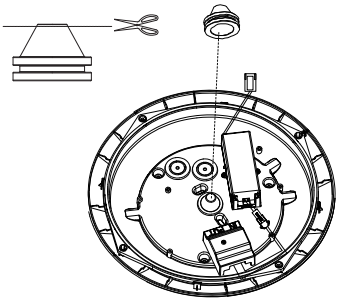

3. A.Cut protective ring and make sure that cutting diameter should be less than diameter of input power cord.
B.Insert protective ring into hole properly (Diameter Φ20mm).

4

Unit: mm

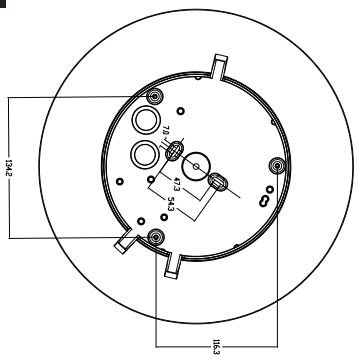

4. Installation size

5

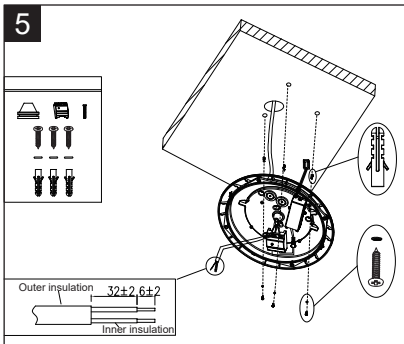

5. A.Drill holes in the ceiling according to installation holes in base and insert the sleeves.
B.Put power cord through protective ring.
C.Lock base on the ceiling with gaskets and screws.

6

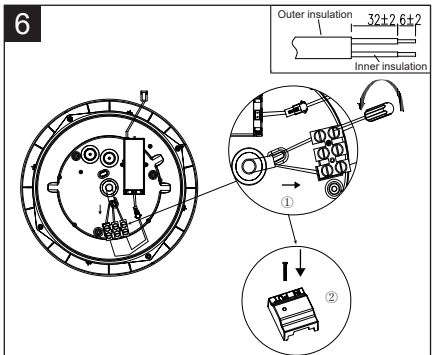

6. A.Loose terminal block screws, then individually connect the L and N wire of AC input wire to L/N terminal and tighten the screws.
B.Close the terminal block cover and tighten the screws.

7

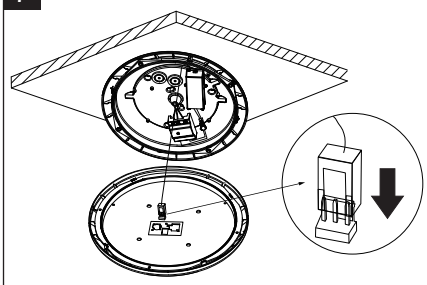

7. Lock the connector between base and LED module.

8

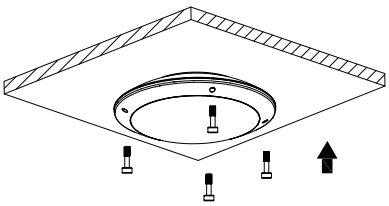

8. Put the LED module and cover onto the body properly and tighten the screws.

9

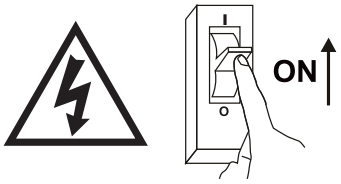

9. Reconnect mains supply.

Eyelid Trim Installation (Please order separately)

1

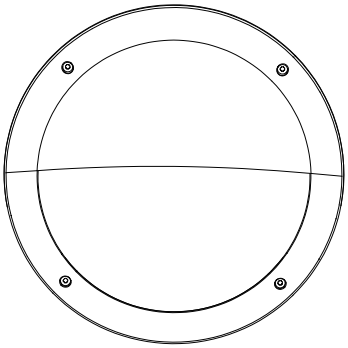

1. Get the new eyelid trim.

2

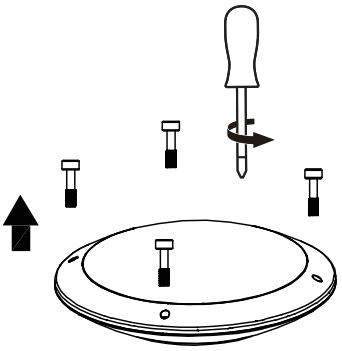

2. Open the Unit bunker which need to be changed to eyelid trim.

3

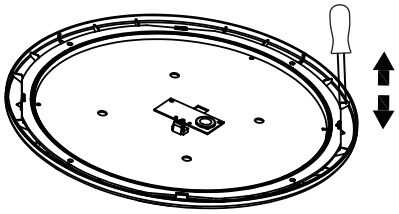

3. Separate the LED module trim and diffuser with screw driver.

4

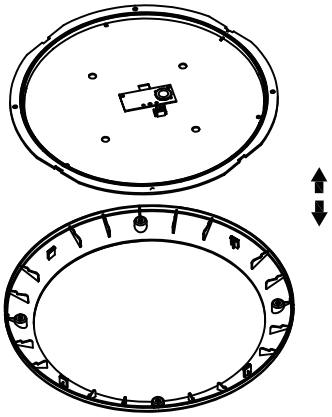

4. Take off original trim from diffuser.

5

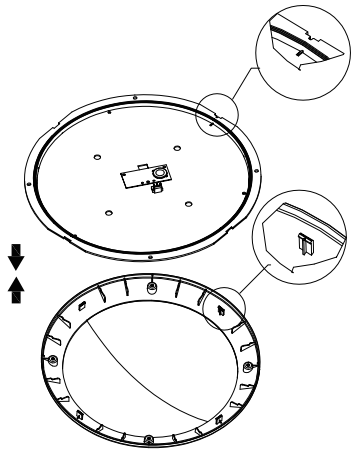

5. Attach the new eyelid trim to LED module.

6

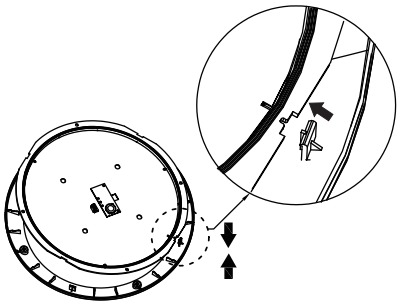

6. Align the groove on the diffuser's edge and press the eyelid trim in.

7

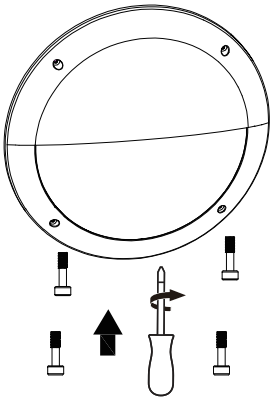

7. Tighten the four screws on trim surface to finish the installation.

Energetic Lighting Australia Pty Ltd
Unit 1, 350 Edgar Street, Condell Park,
Sydney, NSW, 2200, Australia
Tel: 1300215598
E-mail: info@energeticlighting.com.au
Web: energeticlighting.com.au